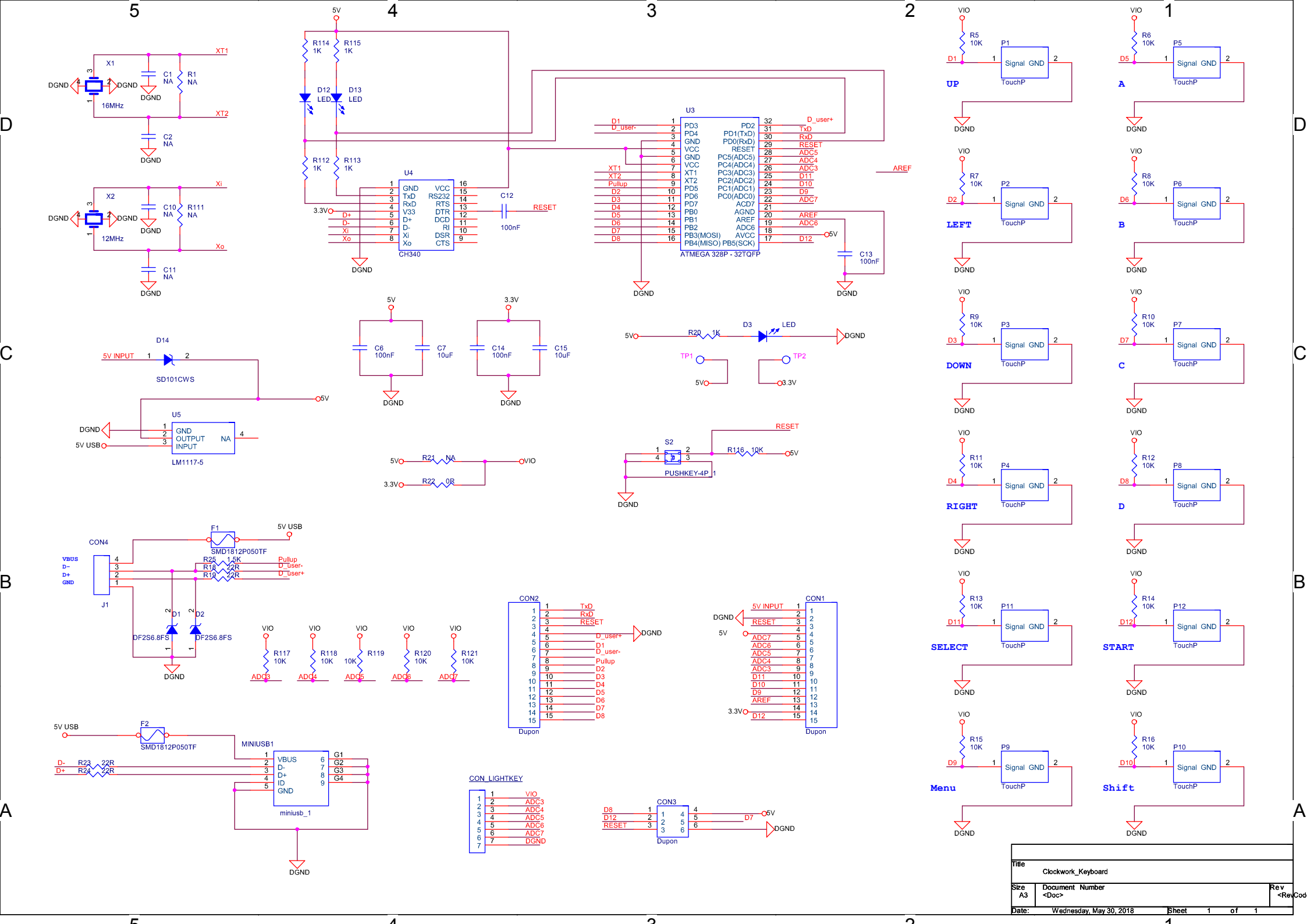
X1
16MHz
C1 NA
R1 NA
C2 NA
XT1
XT2
DGND
X2
12MHz
C10 NA
R111 NA
C11 NA
Xi
Xo
R114 1K
R115 1K
R112 1K
R113 1K
D12 LED
D13 LED
U4
CH340
GND
TxD
RxD
V33
D+
D-
Xi
Xo
VCC
RS232
RTS
DTR
DCD
RI
DSR
CTS
3.3V
C12
100nF
RESET
U3
ATMEGA 328P - 32TQFP
PD3
PD4
GND
VCC
GND
VCC
XT1
XT2
PD5
PD6
PD7
PB0
PB1
PB2
PB3(MOSI)
PB4(MISO)
PD2
PD1(TxD)
PD0(RxD)
RESET
PC5(ADC5)
PC4(ADC4)
PC3(ADC3)
PC2(ADC2)
PC1(ADC1)
PC0(ADC0)
ACD7
AGND
AREF
ADC6
AVCC
PB5(SCK)
D_user+
D_user-
Pullup
AREF
5V
C13 100nF
D14
5V INPUT
SD101CWS
U5
LM1117-5
5V USB
C6 100nF
C7 10uF
C14 100nF
C15 10uF
R20 1K
D3 LED
TP1
TP2
3.3V
R21 NA
R22 0R
VIO
S2
PUSHKEY-4P
R116 10K
CON4
J1
VBUS
D-
D+
GND
F1
SMD1812P050TF
R25 1.5K
R18 22R
R19 22R
D1 DF2S6.8FS
D2 DF2S6.8FS
R117 10K
R118 10K
R119 10K
R120 10K
R121 10K
ADC3
ADC4
ADC5
ADC6
ADC7
CON2
Dupon
TxD
RxD
RESET
D_user+
D1
D_user-
Pullup
D2
D3
D4
D5
D6
D7
D8
CON1
5V INPUT
RESET
ADC7
ADC6
ADC5
ADC4
ADC3
D11
D10
D9
AREF
D12
F2
MINIUSB1
miniusb_1
VBUS
D-
D+
ID
GND
G1
G2
G3
G4
R23 22R
R24 22R
CON_LIGHTKEY
CON3
R5 10K
R6 10K
R7 10K
R8 10K
R9 10K
R10 10K
R11 10K
R12 10K
R13 10K
R14 10K
R15 10K
R16 10K
P1
P2
P3
P4
P5
P6
P7
P8
P9
P10
P11
P12
Signal GND
TouchP
UP
A
LEFT
B
DOWN
C
RIGHT
D
SELECT
START
Menu
Shift
Title
Clockwork_Keyboard
Size
A3
Document Number
<Doc>
Rev
<RevCode
Date:
Wednesday, May 30, 2018
Sheet
1
of
1